Oilgear Towler

Pump, Fixed Delivery

(Internally Boosted)

PFBAB or PFBA9

ENGINEERING 1

General Information

The Oilgear Towler PFBA* series pump is a fixed displacement, seated valve, axial piston pump. The discharge can be separated into double or combined for single connections (see page 8). This data sheet has information about the internally boosted version. For details of the separately boosted PFBA* pumps, please refer to data sheet 2P148. Only the internally boosted version is dimensionally interchangeable with Oilgear Towler A-series pumps. PFBAB pumps are designed for use on mineral oil and similar viscosity fluids. PFBA9 pumps are for use with low visocity fluids such as 95/5 HFAe.

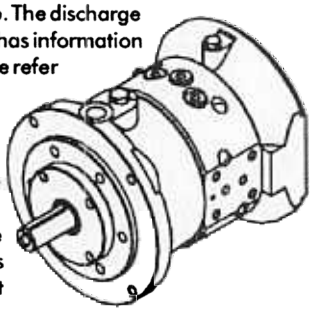

This pump is suitable for one direction of rotation. Clockwise or anti-clockwise rotation must be specified. All installation locations are specified as viewed from the drive shaft end. The inlet and discharge positions are independent of the direction of rotation. The inlet pressure must be at least 0.9 bar Absolute (minus 0.1 bar gauge) when running. The inlet flow is nominally 6 litres above the discharge flow at 1500 rpm. These units are designed to run with a case full of fluid at all times. Therefore fill the case before starting and connect the drain accordingly.

All dimensions given on this data sheet are in millimetres unless otherwise stated. Further information on the PFBA* pump is available. Consult Oilgear Towler Operating and Maintenance Instructions booklet 1480. Alternatively contact Oilgear Towler direct.

MAIN PRESSURE AND TORQUE CHARACTERISTICS

Pump	Maximum Working Pressure (bar)	Maximum Case Pressure (bar)	Maximum Input Torque (Nm)	Maximum Through Drive Torque (Nm)	Maximum Shaft Speed (rpm)
PFBAB	1000	2	180	95	1800
PFBA9	345	1	180	95	1500

For details of single discharge relief valves that can be directly mounted on the discharge face of this pump, refer to data sheets A23 and A24. For relief and unloading valves that allow relief on a small section and unload on a larger section, refer to data sheets A25 and A26.

GENERAL CHARACTERISTICS

TYPE	Fixed displacement, seated valve, axial piston pump.	
FLUIDS & VISCOSITIES	Mineral Oil	ISO 6743/4 Type HM or HV. Visocity range is 5 to 100cSt; with cold start is 200 cSt. Maximum inlet temperature is 70°C.
	Fire resistant fluids	HFDR Phosphate Ester, rating as for mineral oil. (NOTE: EPDM seals are required).
		HFC Water Glycol. Pressure rating reduced to 275 bar.
		HFA High water based fluids (80/20), rating as for 95/5 or HFC.
	For 95/5 or similar HFA fluids	HFAe pressures up to 345 bar. HFAs pressures up to 250bar. Visocity range is 0.5 to 1.5 cSt. Maximum inlet temperature is 40° C
	Aircraft Fluids	Mineral oil & "Skydrol" at mineral oil rating. Above 350 bar consult Oilgear Towler. (NOTE: EPDM seals are required for "Skydrol").
	Other Fluids	Castor Oil ASTM 960-79 100% duty.
		Water & oil emulsion 60/40 HFB 240 bar maximum.
		Kerosene and diesel fluid 250 bar maximum.
	(NOTE; Consult Oilgear Towler for details).	Bio-degradable fluids (vegetable & synthetic) HTG, HPG, HE. 100% duty, dependant on fluid limitations.
FLUID CLEANLINESS	High pressure systems need cleaner fluids and the aim should be to achieve ISO 4406 code 14/11 or cleaner.	

Oilgear Towler	Pump, Fixed Delivery (Internally Boosted) PFBAB or PFBA9	ENGINEERING	2

Installation Drawing

REAR VIEW

MOUNTING FACE

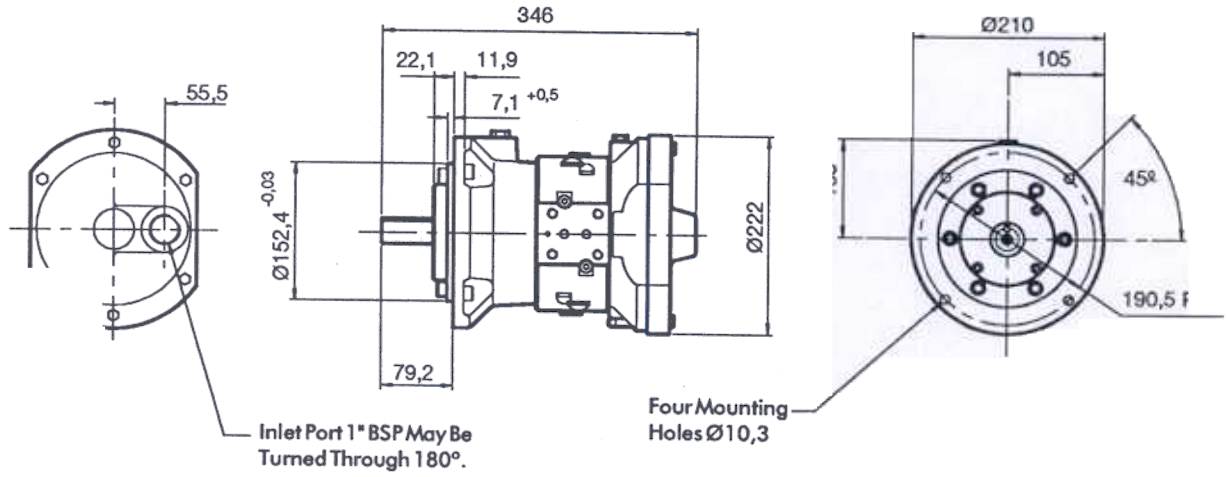

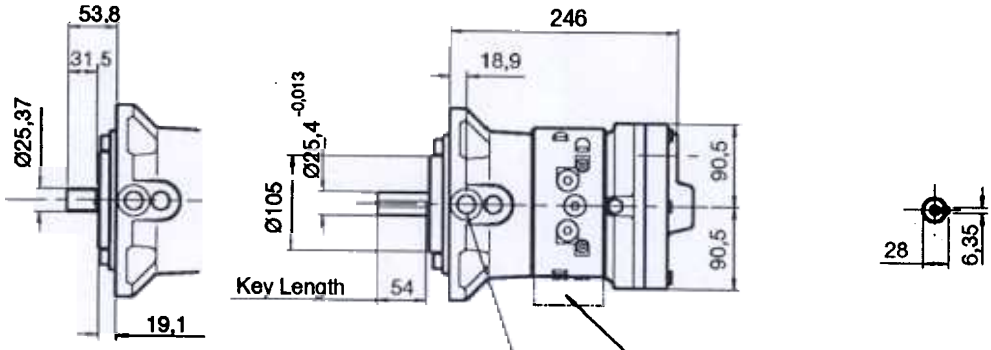

BS2059 6 Spline (Shallow) Shaft For Replacement Pumps only.

STD KEYED SHAFT

Unit mass is 45kg.

P01021G

OILGEAR TOWLER LTD
Oaklands Road, Leeds, West Yorkshire, LS13 1LG.

2P147 11/97

Tel 0113 2577721
Fax 0113 2559537

Oilgear Towler	Pump, Fixed Delivery (Internally Boosted)	ENGINEERING	3
	PFBAB or PFBA9		

Installation Drawing - Foot Mounting

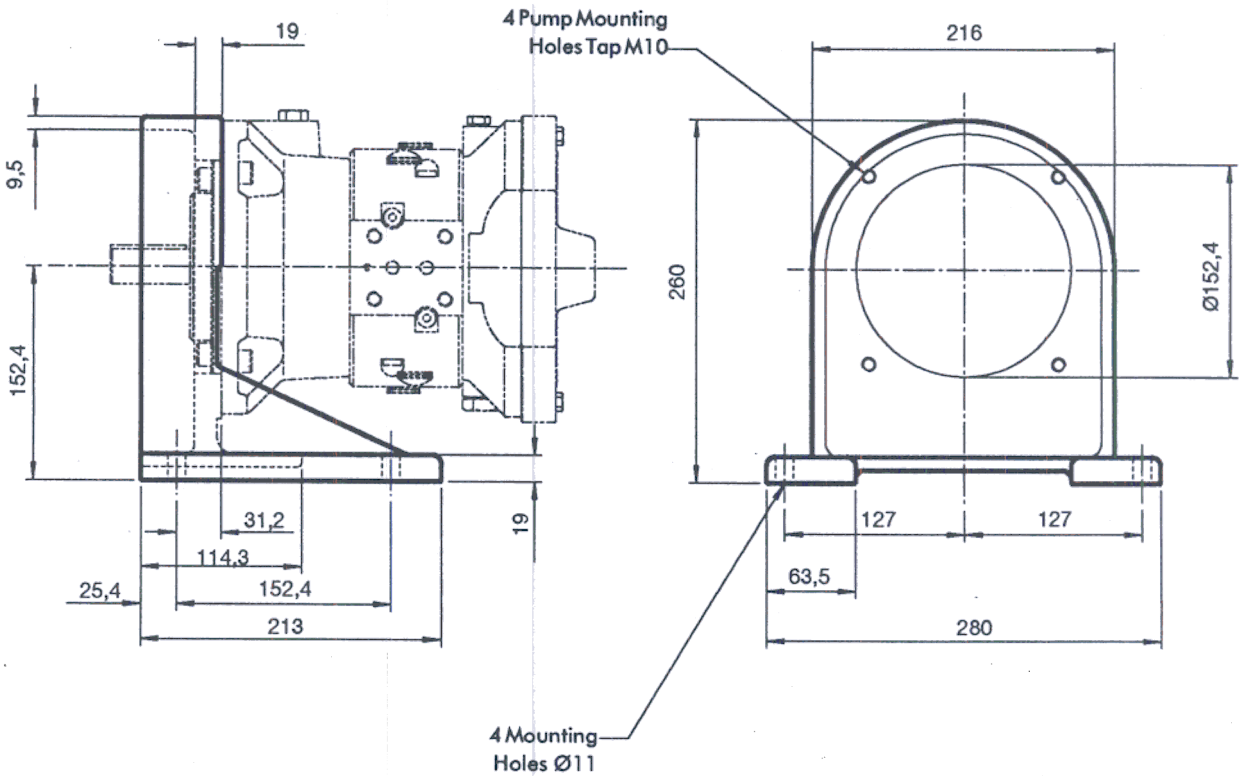

Additional mass of foot mounting 9kg.

OILGEAR TOWLER LTD
Oaklands Road, Leeds, West Yorkshire, LS13 1LG.

Tel 0113 2577721
Fax 0113 2559537

Pump, Fixed Delivery
(Internally Boosted)

PFBAB or PFBA9

Oilgear Towler

Installation Drawing - Tandem Mounting with other PFBA* Pumps

PFBA* - PFBA* PUMPS

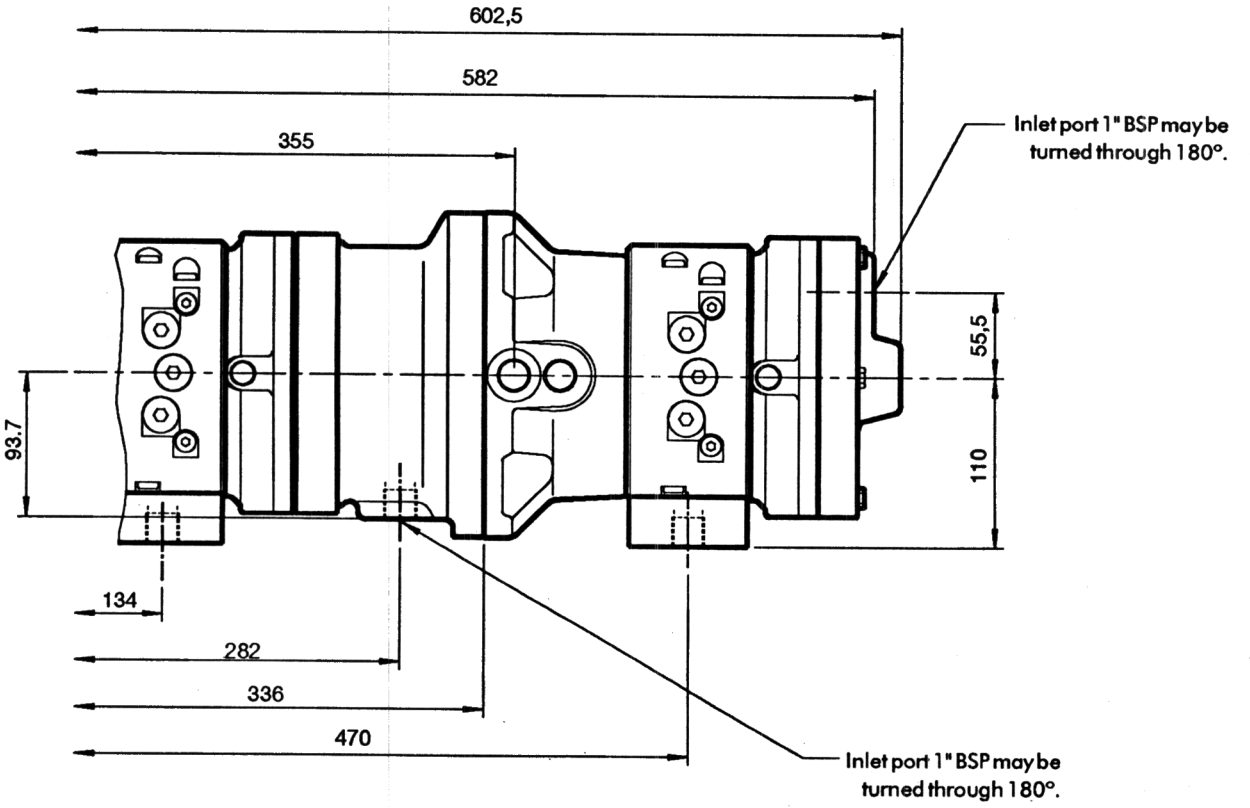

Additional mass of intermediate housing 12,2kg.

OILGEAR TOWLER LTD
Oaklands Road, Leeds, West Yorkshire, LS13 1LG.

Tel 0113 2577721
Fax 0113 2559537

Installation Drawing - Tandem Mounting with other pumps

PFBA* - PVWH PUMPS

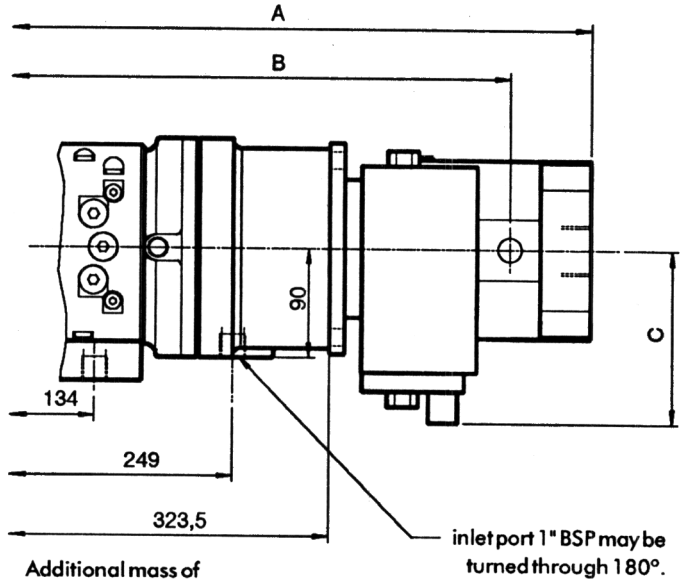

Additional mass of intermediate housing 10,7 kg.

DIMENSIONS (mm)			
SIZE	A	B	C
04	506,5	454,5	123,2
06/10	506,5	454,5	123,2
11/15/20	539,5	473,0	144,0

Note:- for full installation data and dimensions for PVWH pumps, see Oilgear Towler PVWH pump bulletins 47015, 47016 and 947015.

Mountings can be supplied suitable for other pumps using SAE 2 - bolt fixings type A, B, B - B.

PFBA* - VICKERS VANE PUMPS

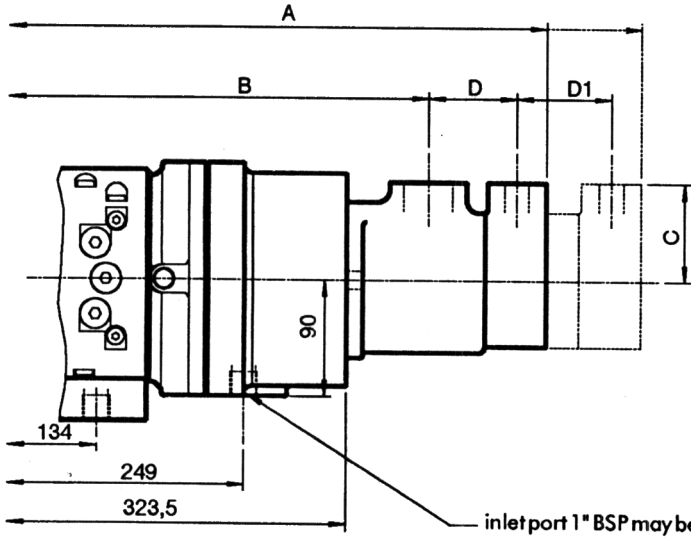

Additional mass of intermediate housing 10,7 kg.

DIMENSIONS (mm)					
	A	B	C	D	D1
V10	450,3	347,9	63,0	78,8	—
V20	463,5	354,3	69,0	86,0	—
V2010	556,2	350,2	76,0	94,8	87,3
V2020	556,7	350,2	74,7	95,5	85,1
20V	479,3	386,8	76,0	69,5	—
25V	485,3	361,3	76,2	83,0	—

Vickers vane pumps can be rotated in 90° increments.

Note:- for full installation data and dimensions for Vickers vane pumps see Vickers catalogue.

Pump, Fixed Delivery
(Internally Boosted)

PFBAB or PFBA9

Oilgear Towler

Pump Sizes and Data

PUMP SIZES AND DISCHARGE DATA		
Pump Size	Single Discharge (cc/rev)	Double Discharge (cc/rev)
001	0,75	N/A
01-	1,5	N/A
02-	3,0	N/A
1--	2,25	N/A
2--	4,5	2,25/2,25
3--	6,75	2,25/4,5
2/2	9,0	4,5/4,5
4--	9,25	N/A
5--	11,5	2,25/9,25
6--	13,75	4,5/9,25
8--	18,5	9,25/9,25

Case drain flow 9 L/min Minimum pipe size 16 OD x 2mm wall.

Further structural limitations should be taken into consideration:

Discharge block screws	1200 bar
Thrust plate Size 8	375 bar (mineral oil ISO 32 HM)
Housing screw Size 8	1000 bar
Shaft Power Input @ 1500 rpm	28kW (38HP)
Maximum Input Torque	180Nm (133 lbf.ft.)
Maximum Through Drive Torque	95Nm (70 lbf. ft.)
Minimum Shaft Speed	700 RPM

OILGEAR TOWLER LTD
Oaklands Road, Leeds, West Yorkshire, LS13 1LG.

Tel 0113 2577721
Fax 0113 2559537

Coding

PUMP CODE

Block Number Explanation	1	2	3	4	5	6	7		8	9	10	11	12A	12B	13	14	/	15	/
Pump Example	P	F	BA	*	***	A1	B	—	*	*	*	*	*	*	1	*	/	*	/

4 CONSTRUCTION

9	95/5 low viscosity fluids internal boost
B	mineral oil viscosity fluids internal boost

5 NOMINAL SIZE

001	0,75 cc/rev
01-	1,5 cc/rev
02-	3,0 cc/rev
2/2	9,0 cc/rev
1--	2,25 cc/rev
2--	4,5 cc/rev
3--	6,75 cc/rev
4--	9,25 cc/rev
5--	11,5 cc/rev
6--	13,75 cc/rev
8--	18,5 cc/rev

8 MAXIMUM DESIGN PRESSURE

3	PFBA9 Pumps
A	PFBAB Pumps

9 ROTATION

L	Anti-clockwise
R	Clockwise

10 MOUNTING PATTERN

S	Spiggot / Flange
F	Foot

11 INLET POSITION

L	Left
R	Right

12A DISCHARGE POSITION

L	Left
R	Right

12B DISCHARGE CONNECTION BLOCK

N	None
Up To 500 bar	
S	Single
D	Double
R	Relief Valve
Z	Special
U	Relief & Unloading Valve
Up To 1000 bar	
A	Single Stainless Steel Tube Ø16 x 4 wall
B	Double Stainless Steel Tube Ø16 x 4 wall

14 SEALS

B	Buna-N
V	Viton
E	EPDM
Z	Special

/

15 ENDS

C	Closure
F	Tandem PFBA
J	J or H Vane V20
A	SAE A / PVW 06 / 10
K	K Vane 20V, 25V
B	SAE B / PVW 15 / 20

/ REAR OR TANDEM PUMP CODE

Oilgear Towler	Pump, Fixed Delivery (Internally Boosted) PFBAB or PFBA9	ENGINEERING	8

Installation Drawing - Discharge Blocks viewed from Drive Shaft End

UP TO 500 BAR DISCHARGE

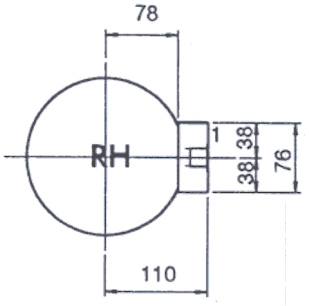

RH = Right Hand

LH = Left Hand

CONNECTION SIZES	
CONN	SIZE
1	1/2" BSP
2	1/2" BSP
3	1/4" BSP
4	1/4" BSP

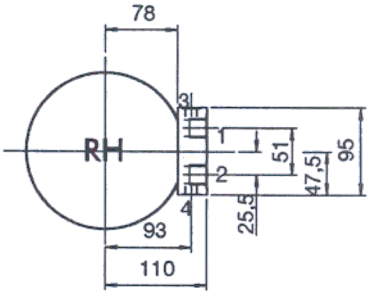

SINGLE DISCHARGE

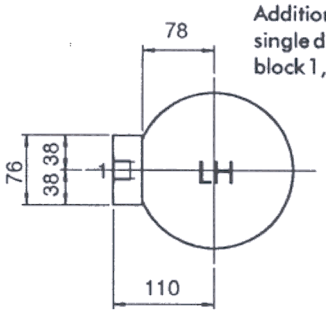

Additional mass of single discharge block 1,2kg.

DOUBLE DISCHARGE

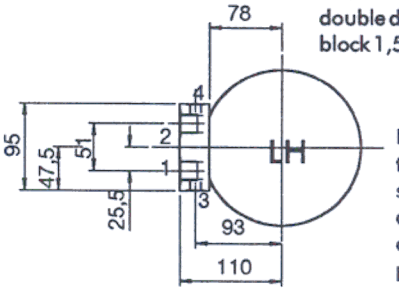

Additional mass of double discharge block 1,5kg.

Port 1 is always the largest section of double discharge pumps.

UP TO 1000 BAR DISCHARGE

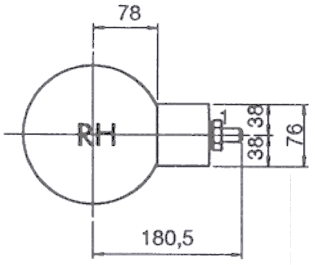

Assembly

Pipe is stainless steel Ø16 x 4 wall, 304, 316 or 321 hydraulic tube.

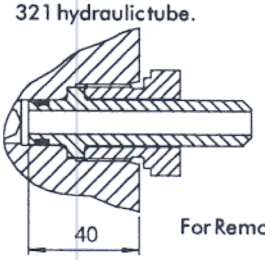

For Removal

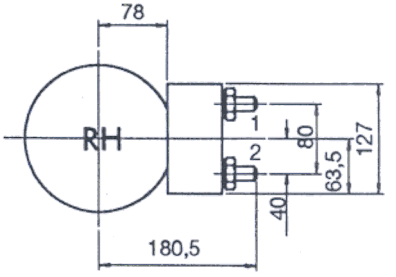

SINGLE DISCHARGE

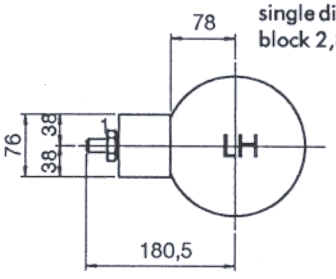

Additional mass of single discharge block 2,88kg.

DOUBLE DISCHARGE

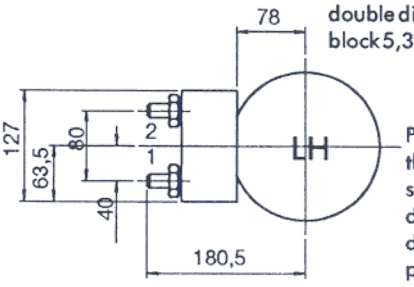

Additional mass of double discharge block 5,36kg.

Port 1 is always the largest section of double discharge pumps.

OILGEAR TOWLER LTD
Oaklands Road, Leeds, West Yorkshire, LS13 1LG.

Tel 0113 2577721
Fax 0113 2559537