SERVICE INSTRUCTIONS

OILGEAR TYPE "C2" and "C3" MULTIPLE PRESSURE COMPENSATOR CONTROLS FOR "PVWH" and "PVW" PUMPS

PURPOSE OF INSTRUCTIONS

These instructions have been prepared to simplify and minimize your work of operating Oilgear type "C2" and "C3" controlled units. This material will inform you as to basic construction, principle of operation and service parts listings. Some controls may be modified for specific applications from those described and other changes may be made without notice.

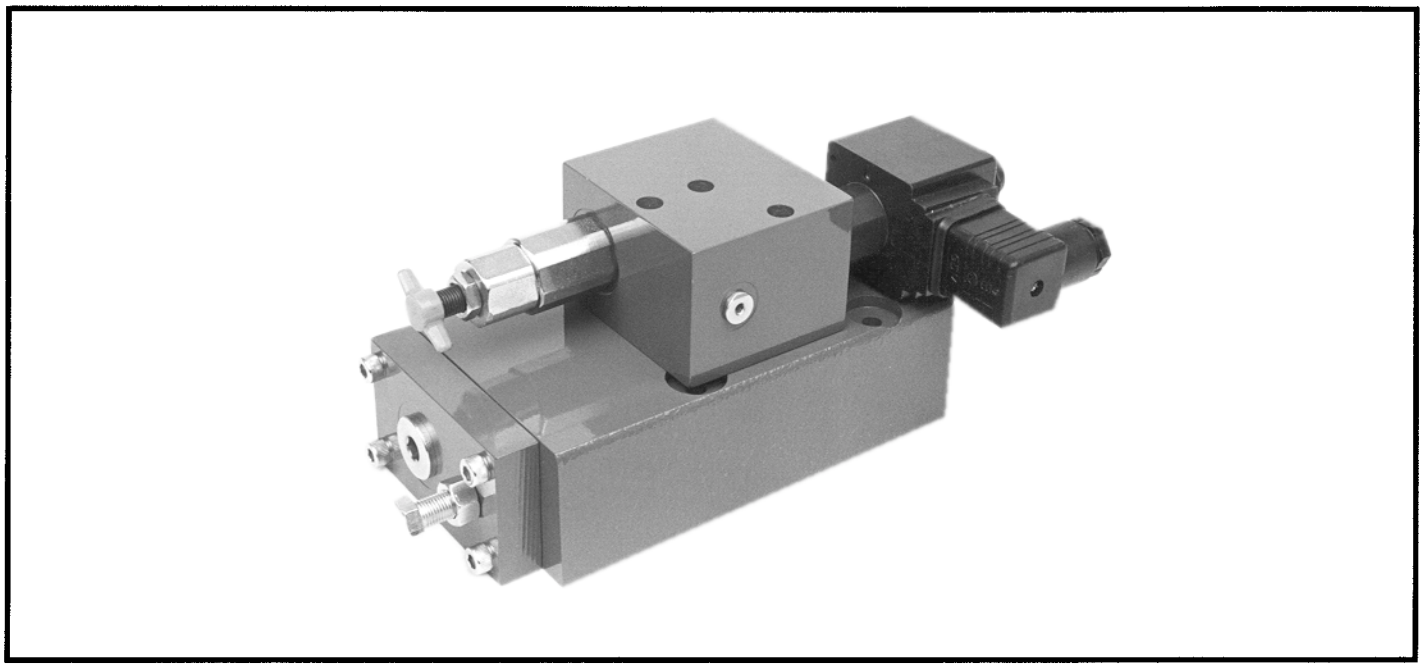

Figure 1. Typical "C2" control for Oilgear "PVWH" and "PVW" pumps (N89-002-04).

REFERENCE MATERIAL

Fluid Recommendation . . . . . Bulletin 90000
Filtration Recommendation . . . . . Bulletin 90007
Piping Information . . . . . Bulletin 90011
"PVWH" & "PVW" Open-Loop Pumps . Bulletin 947015
HSLR Relief Valve . . . . . Section 5, Page B2.1
HS2VO Two-Way Valve . . . . . Section 5, Page C1.1

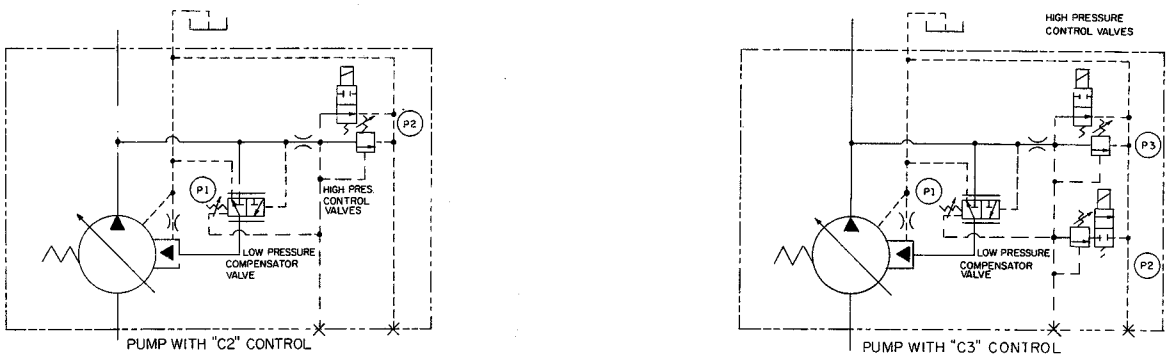

Figure 2. ASA diagrams for "C2" and "C3" controls shown with typical pumps. (509819)

THE OILGEAR COMPANY

2300 So. 51st. Street
Milwaukee, Wisconsin 53219

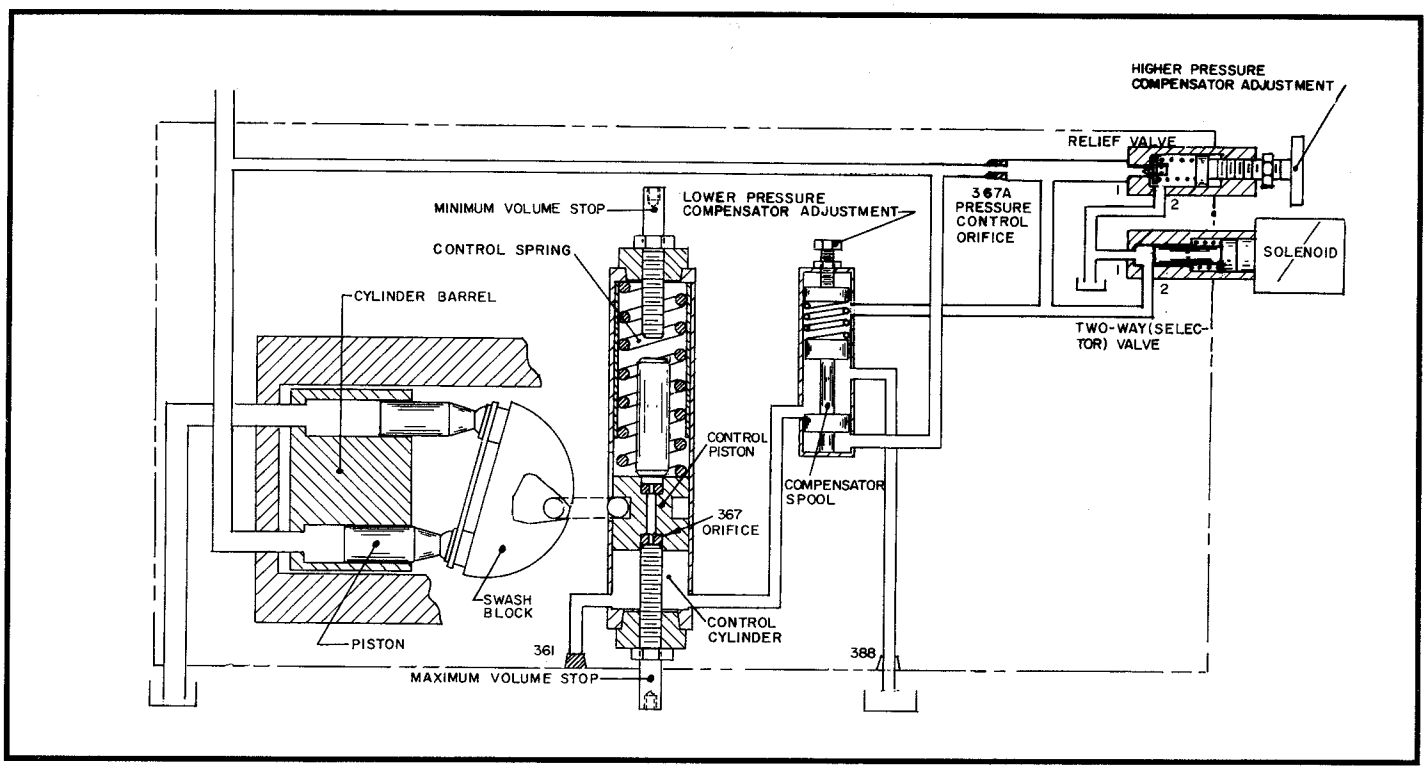

Figure 3. Cut-a-way diagram of "C2" Multiple Pressure Compensator Control (509819).

PRINCIPLE OF OPERATION

"C2" and "C3" controls are designed for (multiple) independently adjustable pressure (compensator) settings as selected by integral solenoid(s).

Refer to figure 3. The type "C2" duai pressure compensator control provides two pressure settings. When pressure in the delivery line is below the setting of the pressure compensator valve, the control piston cylinder is connected (through the pressure compensator spool) to drain and the control piston spring positions the control for full delivery as shown. With solenoid de-energized and when pressure in the delivery line reaches a pressure high enough to shift the pressure compensator spool against it's spring, high pressure is ported into the control cylinder behind the piston which compresses the control piston spring and shifts the pump (swashblock) for reduced delivery until pressure in delivery line holds at the preset pressure compensator valve setting.

When solenoid is energized - the pressure in the pressure compensator valve spring chamber is raised to the level of the high pressure relief valve. This pressure adds to spring setting of the pressure compensator valve, raising the pressure at which the pump compensates (reduces delivery). When pressure reaches the setting of high pressure relief valve, that valve blows and connects the pressure compensator valve spring chamber to drain. Pressure on opposite end of compensator spool positions the spool to allow pressure to enter control cylinder behind the control piston which compresses the control piston spring and reduces pump delivery until pressure in delivery line holds at higher pressure control valve setting. The type "C3" triple pressure compensator control operates on the same principle as the "C2" control.

Standard lower pressure settings ("P1") can be made from 400 psi (27,6 bar) to 1500 psi (103,4 bar) [other ranges are available] and higher pressure settings ("P2") and ("P3") from 900 psi (60 bar) to units rated pressure.

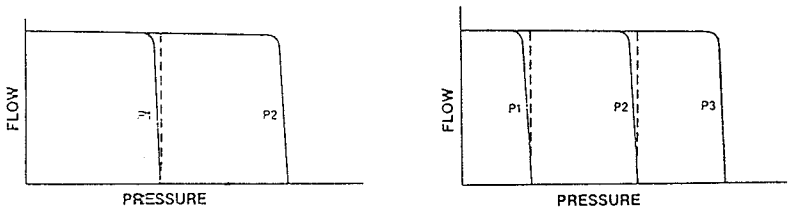

Figure 4. Typical flow vs. pressure curves for "C2" and "C3" controlled pumps.

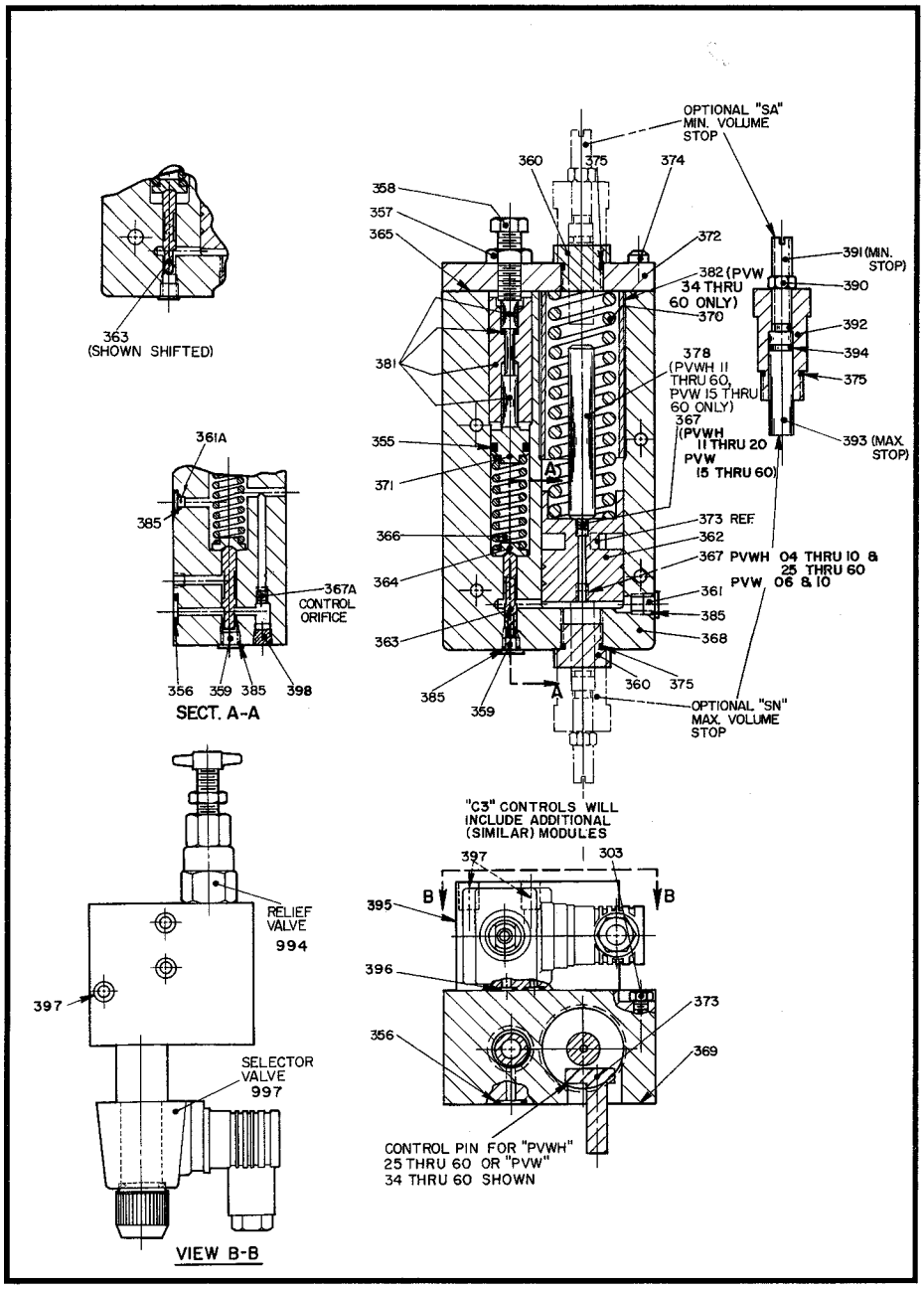

Figure 5. Parts Drawing, Oilgear Type "C2" Control (509819B).

PARTS LIST

Parts used in this assembly are per Oilgear specifications. Use Oilgear parts to ensure compatibility with assembly requirements. When ordering replacement parts, be sure to include pump type designation and serial number stamped on nameplate, bulletin and item number. To assure seal and packing compatibility, specify type of hydraulic fluid used.

ITEM NO.	DESCRIPTION
303	Screw, H.H.C. Mounting
355	Seal, O'ring
356	Seal, O'ring
357	Nut, Jam
358	Screw, Lower Pressure Adj.
359	Plug, SAE
360	Plug, SAE
361	Plug, SAE
361A	Plug, SAE
362	Piston, Control
363	Spool, Pressure Comp.
364	Seat, Spring
365	Gasket, Cover
366	Spring, Pressure Comp.
367*	Orifice, Control Piston
367A	Orifice, Pressure Control
368	Housing, "C" Control
369	Gasket, Control Housing
370	Spring, Control Piston
371	Plug, Control
372	Cover, Control Housing
373	Pin, Control Piston
374	Screw, S.H.C.
375	Seal, O'ring
378**	Stop, Control Piston Min. Volume
381	Assembly, Lower Press. Comp. Adj.
382***	Sleeve, Control Piston Stop
385	Seal, O'ring
390	Nut, Jam
391	Stem, Minimum Volume Stop
392	Adapter, Min. and Max. Stop
393	Stem, Maximum Volume Stop
394	Seal, O'ring
395	Module, Cart. Relief Valve
396	Seal, O'ring
397	Screw, SHC
398	Plug, Pipe
994	Assembly, Relief Valve Cartridge
997	Assembly, 2-Way Solenoid Valve

* Spring side of control piston for "PVWH" 11 thru 20 sizes; for "PVW" sizes 15 thru 60 sizes. Opposite side of control piston for all others.

** Used only for "PVWH" 11 thru 60 sizes, or "PVW" 15 thru 60 sizes.

*** Used only on "PVW" 34-60 units.

NOTES:

THE OILGEAR COMPANY
2300 So. 51st. Street
Milwaukee, WI 53219

BULLETIN 947518

Litho in USA