PUMP, VARIABLE DELIVERY
PVW, PVWW, PVWH
34, 45 & 60

WITHOUT CONTROLS

ENGINEERING | **1**

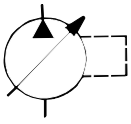

Installation Drawing — **Basic Pump Without Control – Side Ported**

OPTIONAL SAE "C" SPLINE SHAFT
CODE "S"

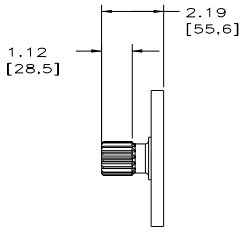

VIEW SHOWING OPTIONAL SPLINE SHAFT
SAE INVOLUTE SPLINE 14 TEETH, 12/24 PITCH
$^{-.005}_{-0.13}$
1.235 [31.37] MAJOR DIA.

OPTIONAL SAE "C" SPLINE SHAFT
CODE "D"

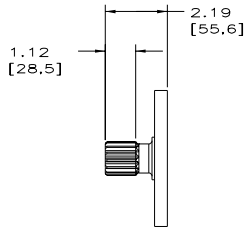

VIEW SHOWING OPTIONAL SPLINE SHAFT
SAE INVOLUTE SPLINE 14 TEETH, 12/24 PITCH
$^{-.005}_{-0.13}$
1.250 [31.75] MAJOR DIA.
CLASS 5 FIT

NOTES:

1) PVWH PUMPS ARE DESIGNED FOR ONE–WAY SERVICE

2) THESE UNITS ARE DESIGNED TO RUN CASE FULL OF FLUID AT ALL TIMES. FILL CASE BEFORE STARTING AND CONNECT DRAIN LINES ACCORDINGLY.

3) NUMERICAL DIMENSIONS GIVEN IN INCHES/[MM].

4) NET WEIGHT– 83 LBS. [37.65 KG].

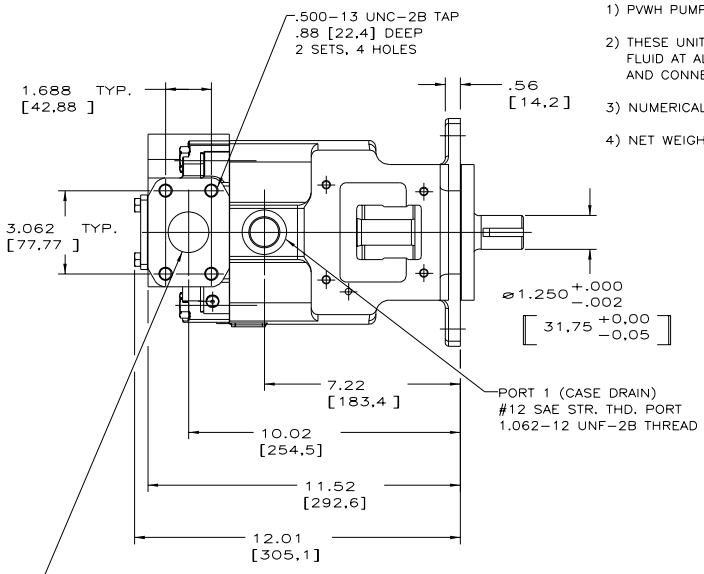

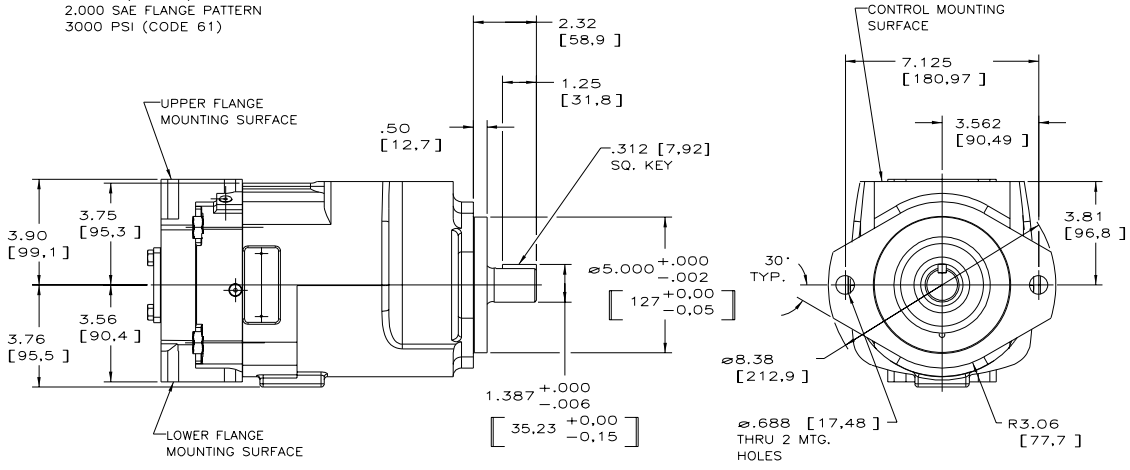

E60329-004

Telephone: (414) 327-1700
Fax: (414) 327-0532

OILGEAR
2300 So. 51st. Street
Milwaukee, WI USA 53219

Issued: Aug., 1999
DS-47969